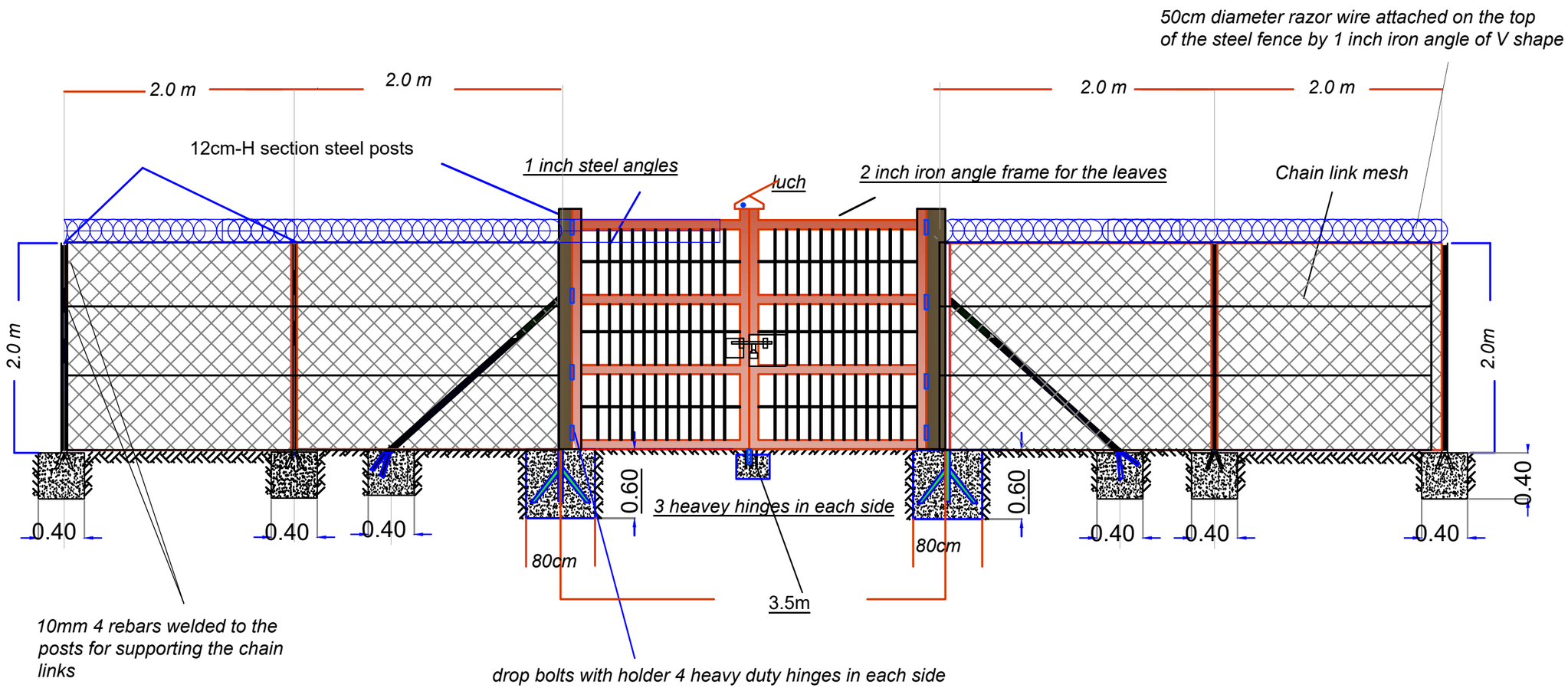

Note to :

The steel chain links shall be welded to the steel posts
at edges and the middle shall be welded to to prevent theft

Chain link perimeter fence (with gate and razor wire) Details

Project Title :

Sudan Integrated Social Sector Infrastructure Rehabilitation Project (SISSIR)

Project funded by :

Project Implemented by : International Organization For migration (IOM) Sudan

GENERAL NOTE:

CERTAIN DRAWINGS ARE NTS (NOT TO SCALE).TECHNICAL NOTES & SPECIFICATION SHALL BE REFERENCED IN DRAWINGS .

NO.	DATE	DESCRIPTION

Designed By:

Chain link perimeter fence

Reviewed By:

Approved By:

Drawing Title:

DRG NO.

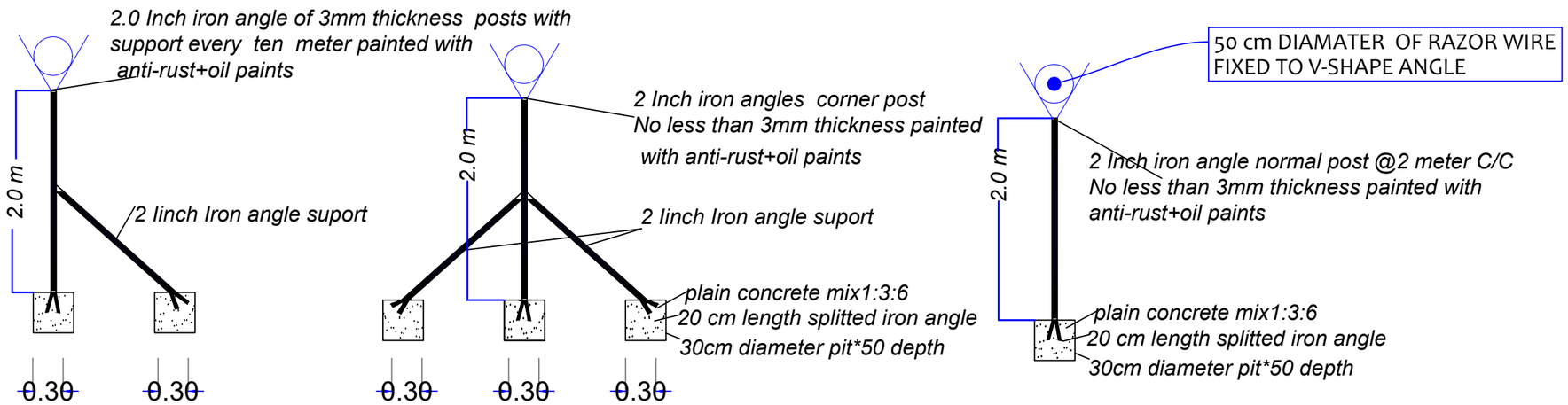

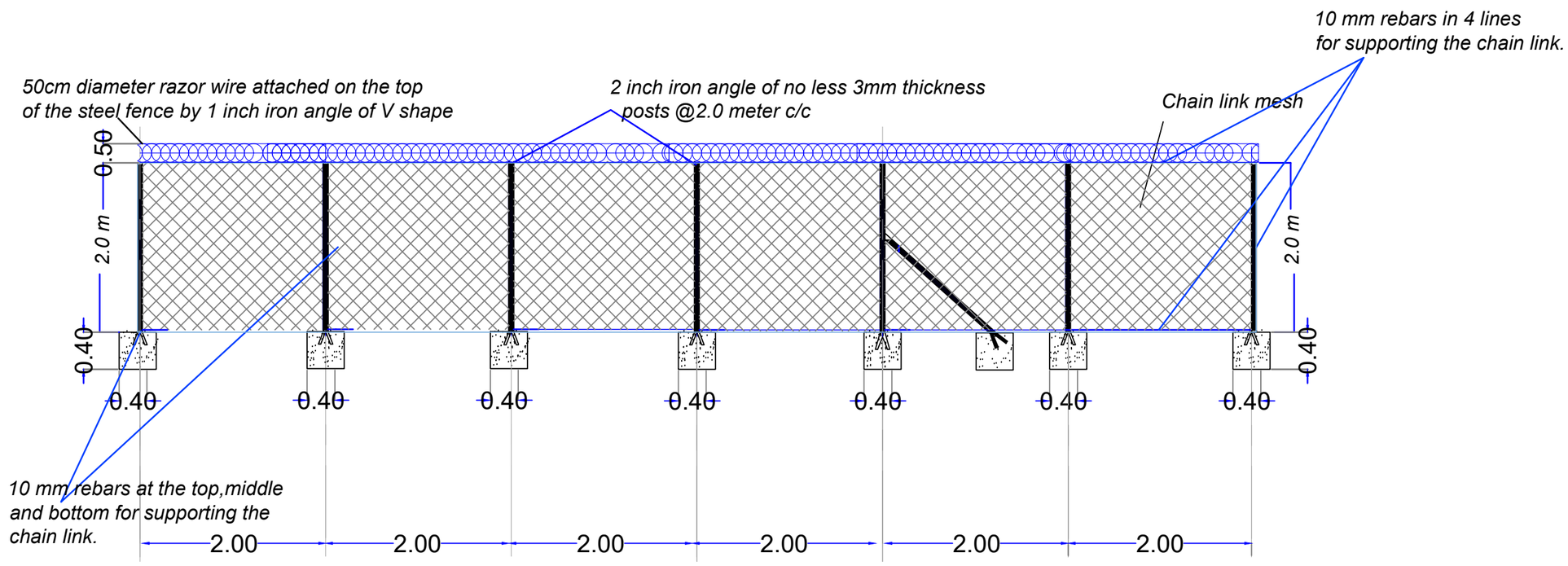

Chain link perimeter fence (with gate and razor wire) Details

BANQUE AFRICAINE DE DEVELOPPEMENT
AFRICAN DEVELOPMENT BANK
AFRICAN DEVELOPMENT FUND
FONDS AFRICAIN DE DEVELOPPEMENT

IOM
UN MIGRATION

Project Title :
Sudan Integrated Social Sector Infrastructure Rehabilitation Project (SISSIR)

Project funded by :

Project Implemented by : International Organization For migration (IOM Sudan

GENERAL NOTE:

CERTAIN DRAWINGS ARE NTS (NOT TO SCALE).TECHNICAL NOTES & SPECIFICATION SHALL BE REFERENCED IN DRAWINGS .

	DATE	DESCRIPTION

Designed By:

Chain link perimeter fence

Reviewed By:

Approved By:

Drawing Title:

DRG NO.

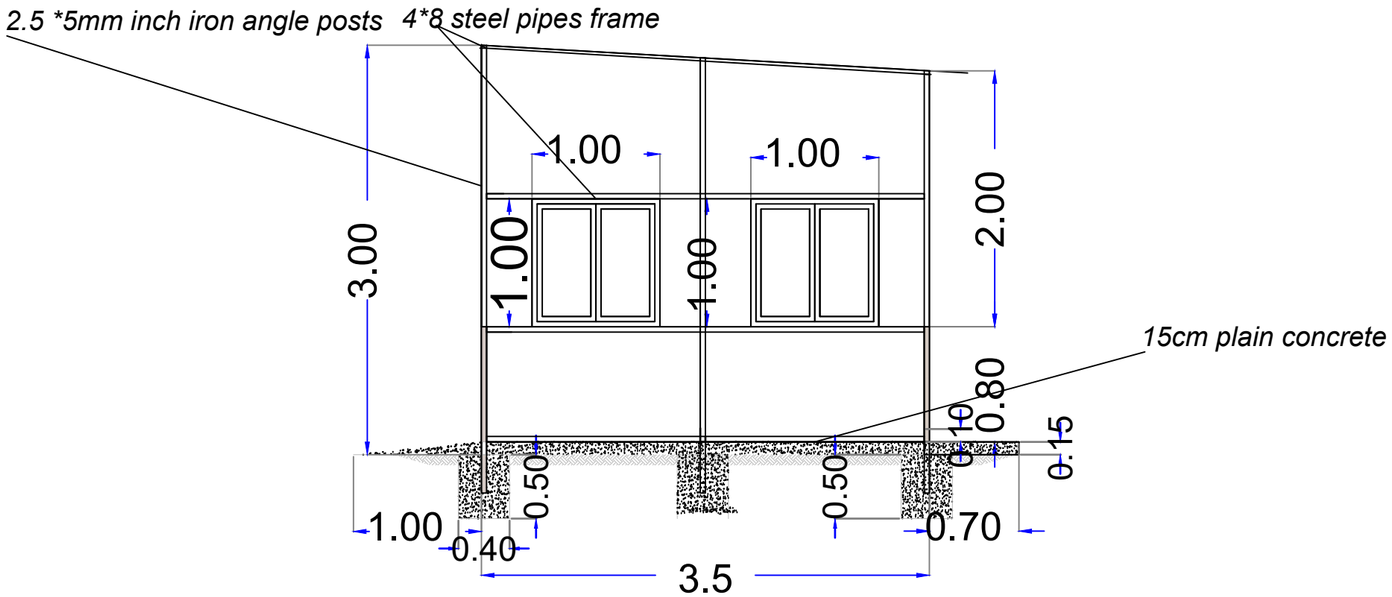

Sectional view

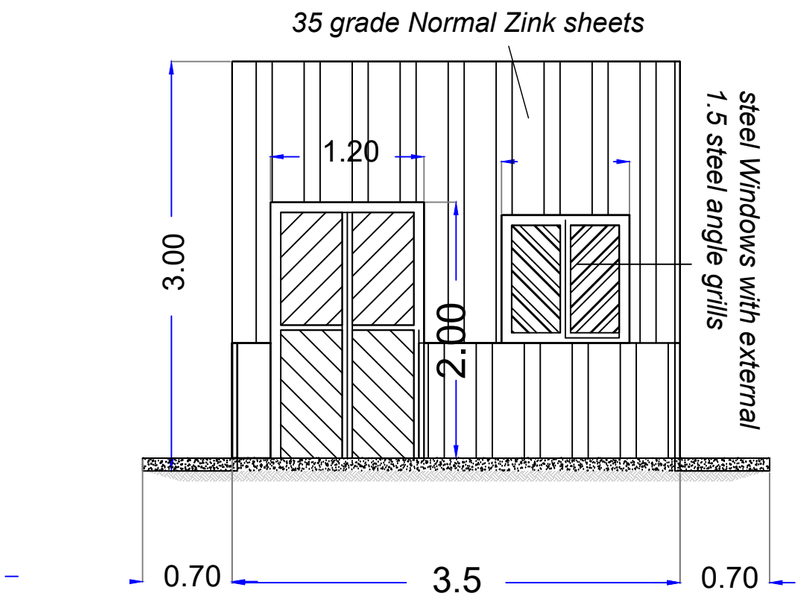

Main View

PLAN

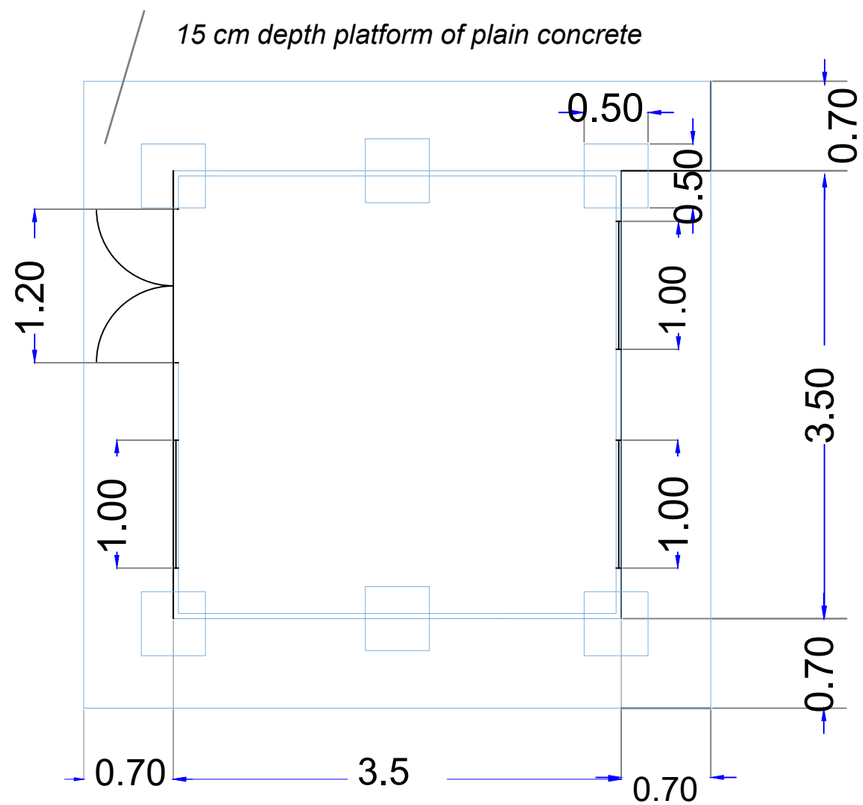

Project Title :

Sudan Integrated Social Sector Infrastructure Rehabilitation Project (SISSIR)

Project funded by :

Project Implemented by : International Organization For migration (IOM) Sudan

GENERAL NOTE:

CERTAIN DRAWINGS ARE NTS (NOT TO SCALE).TECHNICAL NOTES & SPECIFICATION SHALL BE REFERENCED IN DRAWINGS .

NO.	DATE	DESCRIPTION

Designed By:

Control Room

Reviewed By:

Approved By:

Drawing Title:

DRG NO.

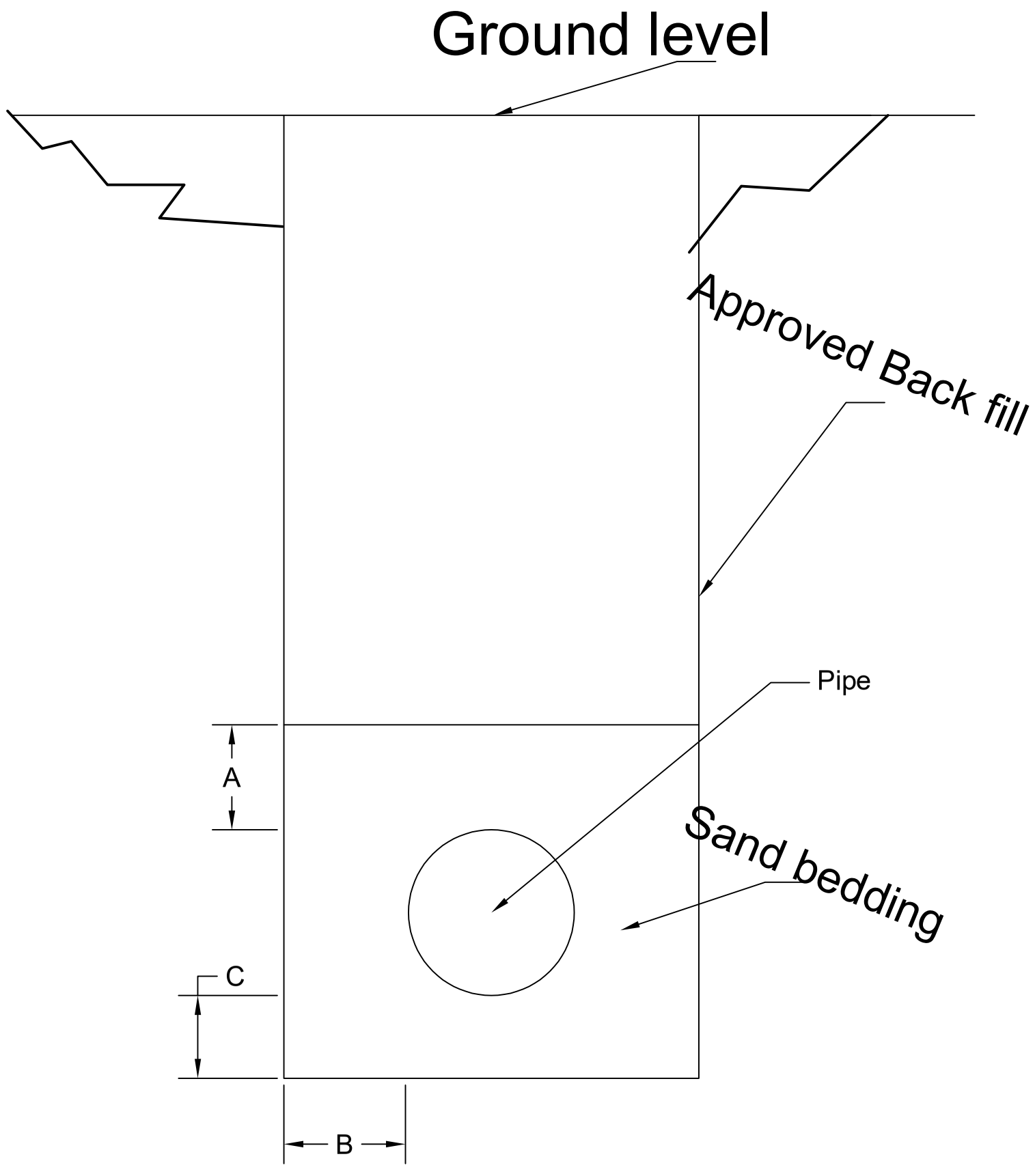

Project Title :
Sudan Integrated Social Sector Infrastructure Rehabilitation Project (SISSIR)

Project funded by :

Project Implemented by : International Organization For migration (IOM Sudan

GENERAL NOTE:

CERTAIN DRAWINGS ARE NTS (NOT TO SCALE).TECHNICAL NOTES & SPECIFICATION SHALL BE REFERENCED IN DRAWINGS .

Nominal Pipe diameter	A	B	C
< 150	100	100	100
> 150 < 300	150	150	100

NO.	DATE	DESCRIPTION

Designed By:
Awadallah ARBAB

Reviewed By:

Approved By: Mohamed IBRAHIM

Drawing Title:
Typical pipe bedding layout

DRG NO. Sheet No (3)

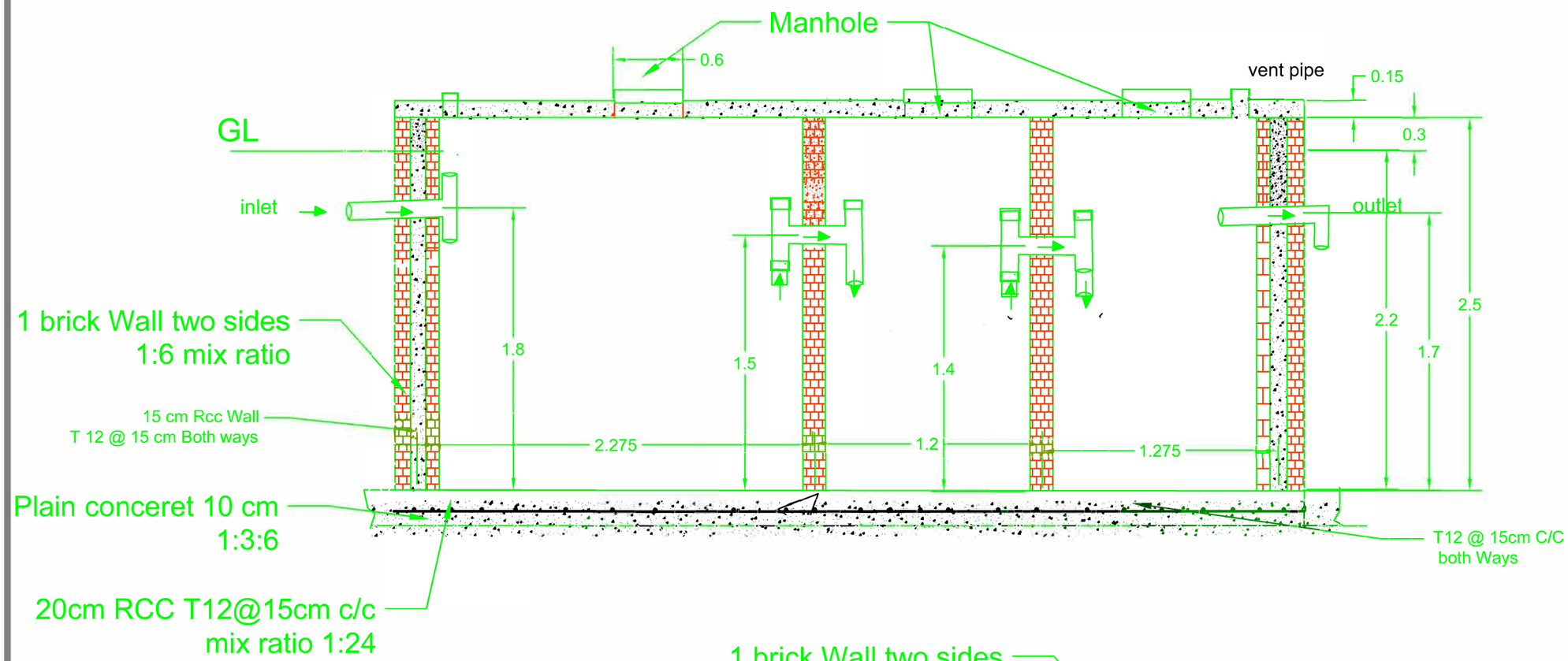

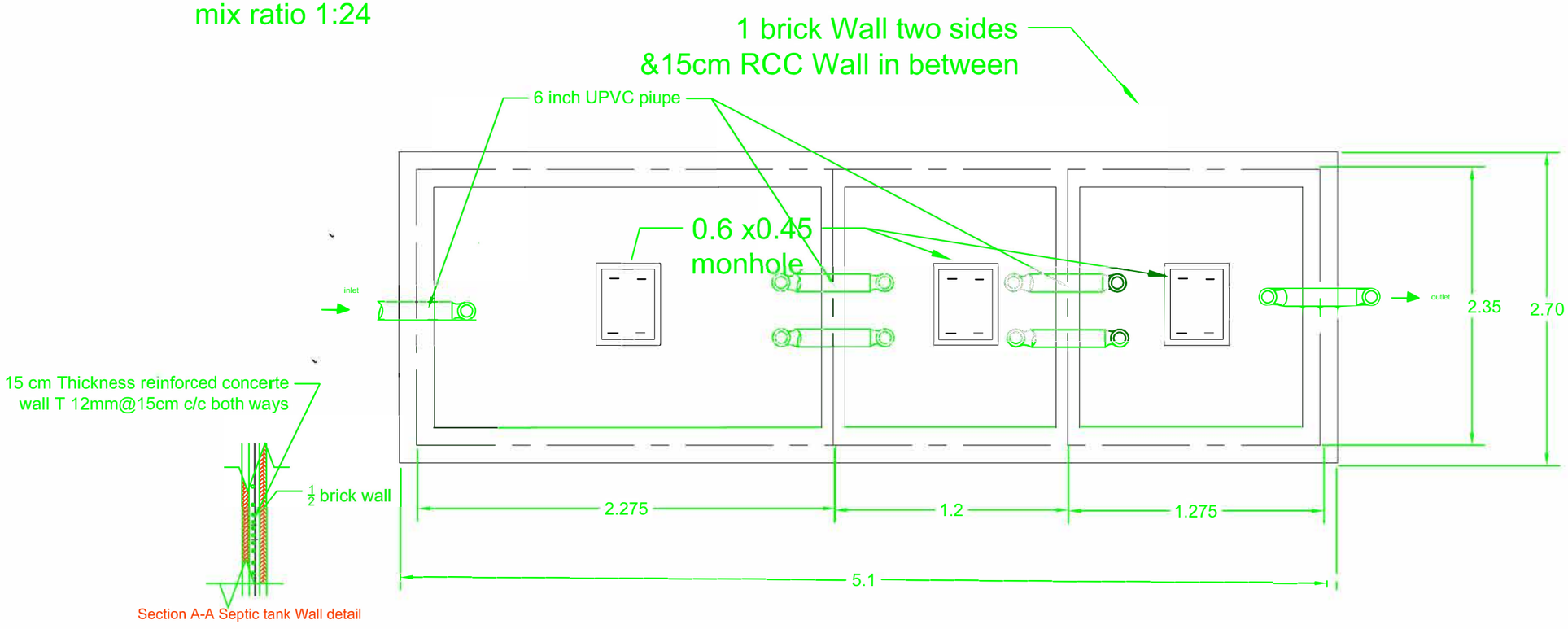

Section A-A Septic tank Wall detail

Project Title : Sudan Integrated Social Sector Infrastructure Rehabilitation Project (SISSIR)

Project funded by : African development Bank AfDB

Project implemented by : International Organization For migration (IOM) Sudan

GENERAL NOTE:

CERTAIN DRAWINGS ARE NTS (NOTTO SCALE).TECHNICAL NOTES & SPECIFICATION SHA LL BE REFERENCED IN DRAWINGS .

The outlet is 10 cm below the inlet

Brick for the wall construction is Grade 1 local red Bricks

PVC pipe is of very good quality

manhole cover opening is from 1/2 inch Angle Iron

NO.	DATE	DESCRIPTION

Designed By : Awadallah ARBAB

Reviewed By :

Approved By : Mohamed IBRAHIM

Drawing Title : Septic Tank

DRG NO.

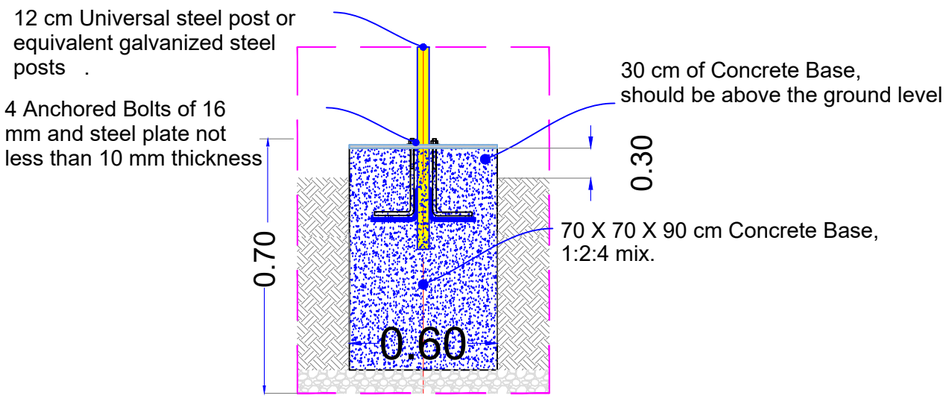

Mounting Structure Foundation details

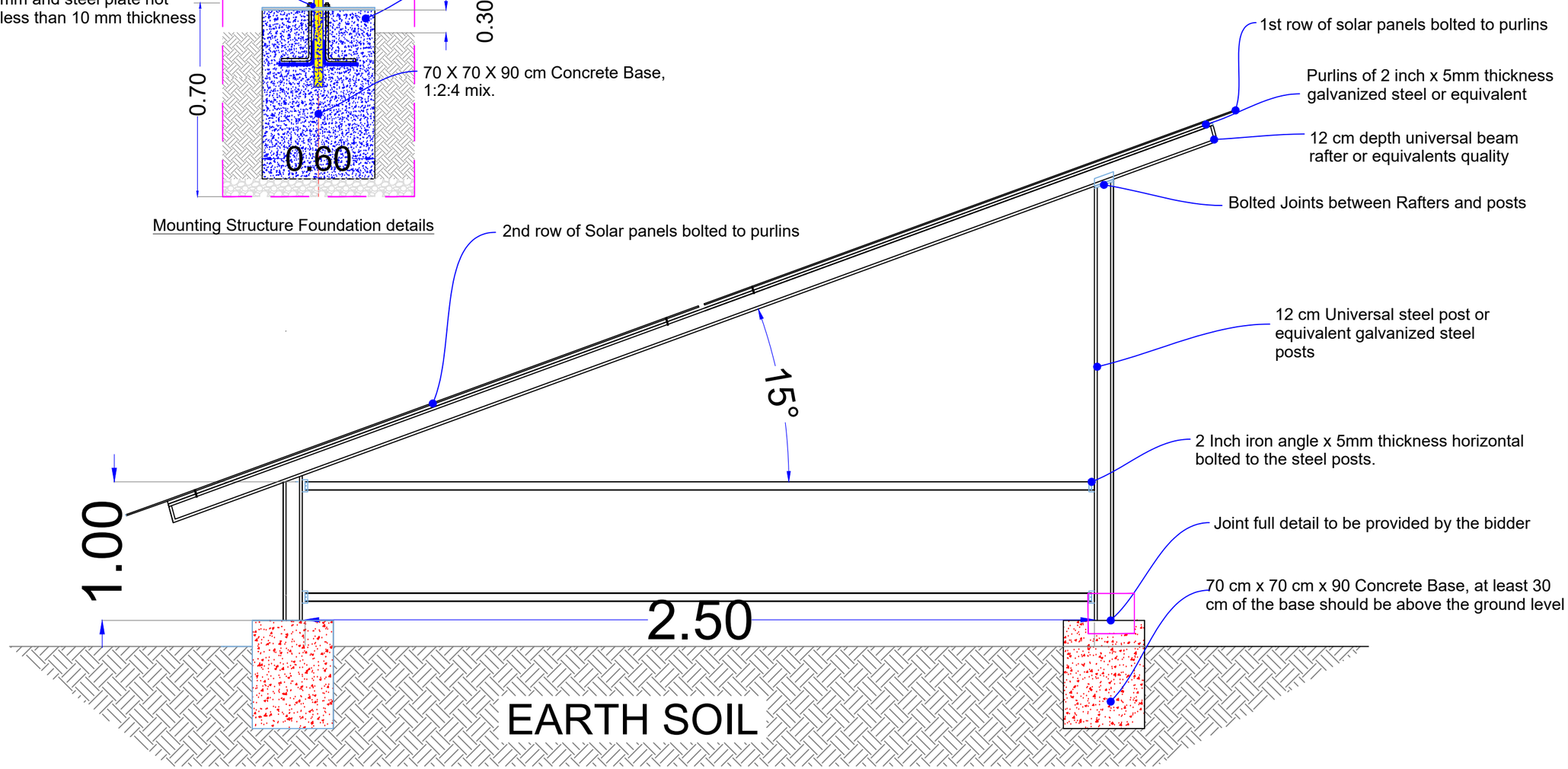

Nate :

- All the mounting structure members should easily assembled and reassemble and require little field works.
- Users assembling catalogues should be provided.
- The Mounting structure shall be used panted with anti-rust and final oil painting

BANQUE AFRICAINE DE DEVELOPPEMENT
AFRICAN DEVELOPMENT BANK
AFRICAN DEVELOPMENT FUND
FONDS AFRICAIN DE DEVELOPPEMENT

IOM
UN MIGRATION

Project Title :
Sudan Integrated Social Sector Infrastructure Rehabilitation Project (SISSIR)

Project funded by :

Project Implemented by : International Organization For migration (IOM Sudan

GENERAL NOTE:

CERTAIN DRAWINGS ARE NTS (NOT TO SCALE).TECHNICAL NOTES & SPECIFICATION SHALL BE REFERENCED IN DRAWINGS .

NO.	DATE	DESCRIPTION

Designed By:

Reviewed By:

Approved By:

Drawing Title:

Solar Panels Mounting Structure

DRG NO.

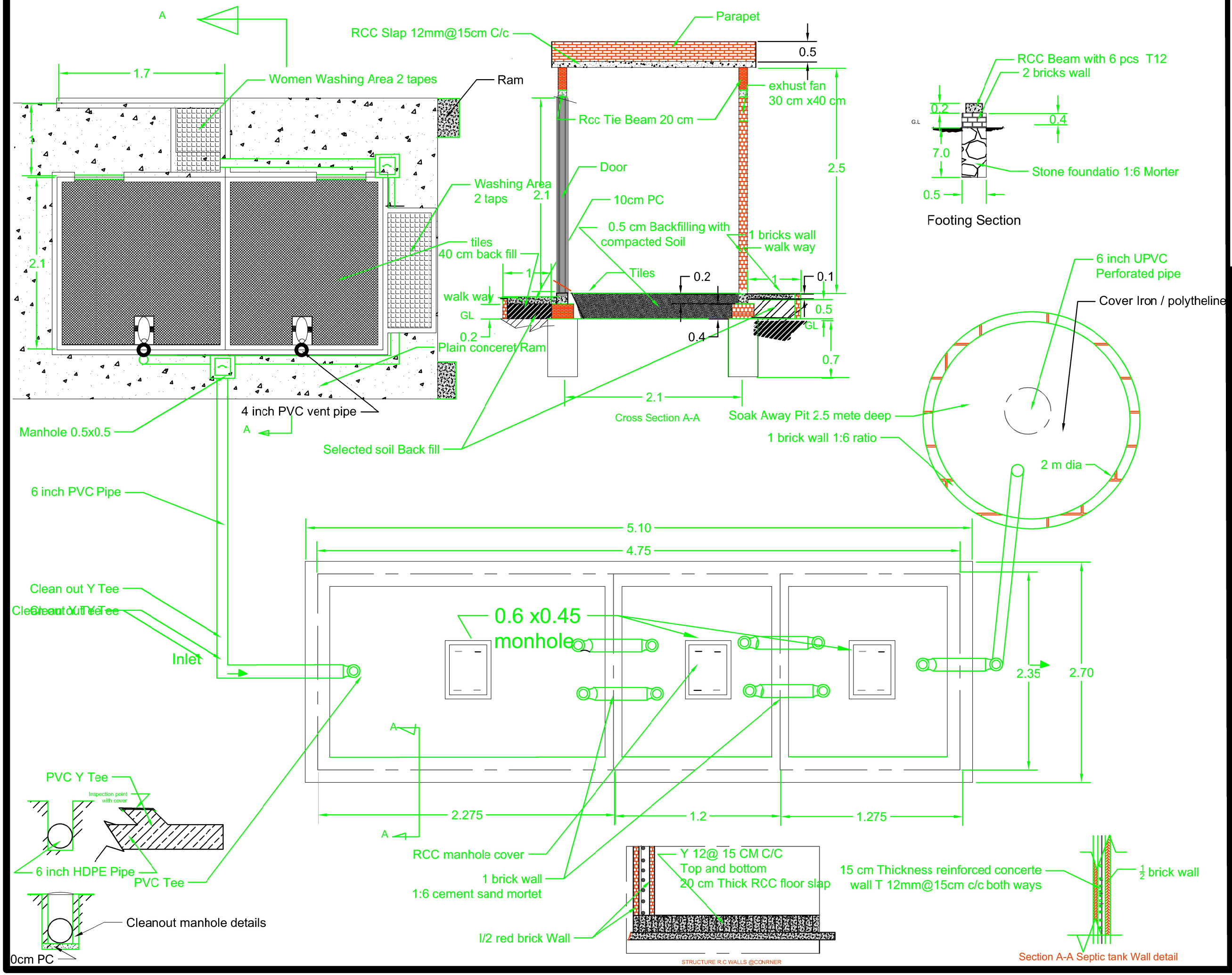

Project Title : Sudan Integrated Social Sector Infrastructure Rehabilitation Project (SISSIR)

Project funded by : African development Bank AfDB

Project Implemented by : International Organization For migration (IOM) Sudan

GENERALNOTE:

CERTAIN DRAWINGS ARE NTS (NOT TO SCALE).TECHNICAL NOTES & SPECIFICATION SHALL BE REFERENCED IN DRAWINGS .

pipe are 6 inch PVC pipe of good quality

walls are Joint Wall as per setion bellow

The platform is pLain concere

out site the toilet 1 m width

NO.	DATE	DESCRIPTION

Designed By: Awadallah ARBAB

.....

Reviewed By:

Approved By: Mohamed IBRAHIM

Drawing Title: 2 Cubicle VIP

DRG NO.

Jebal Moya
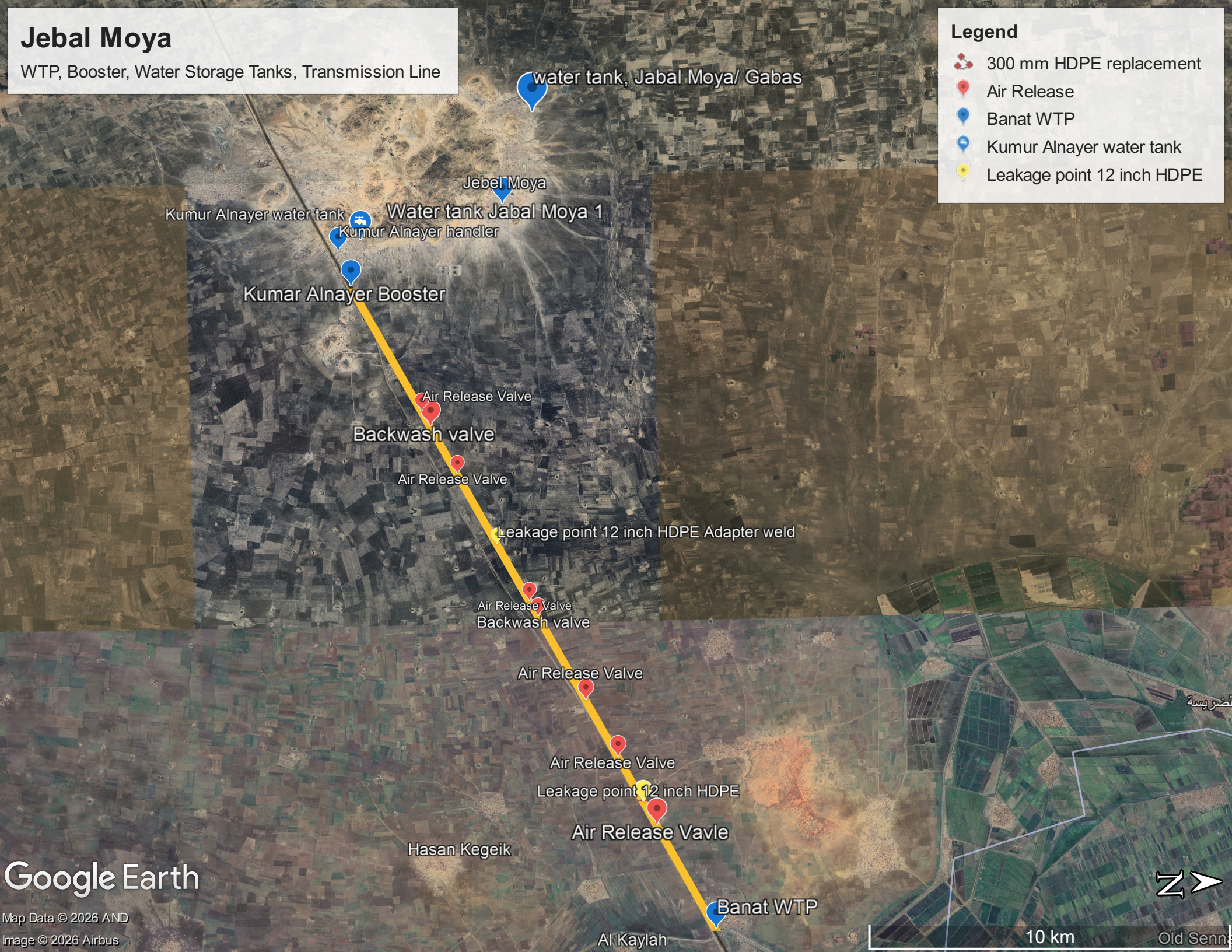
WTP, Booster, Water Storage Tanks, Transmission Line